Product Description

Line	**Extra**
Type	**Shower shelf (AISI 304)**
Code	**SH-0202-M90**

Technical Sheet

Finishing	**Mat Inox**
Metal	**INOX AISI 304**

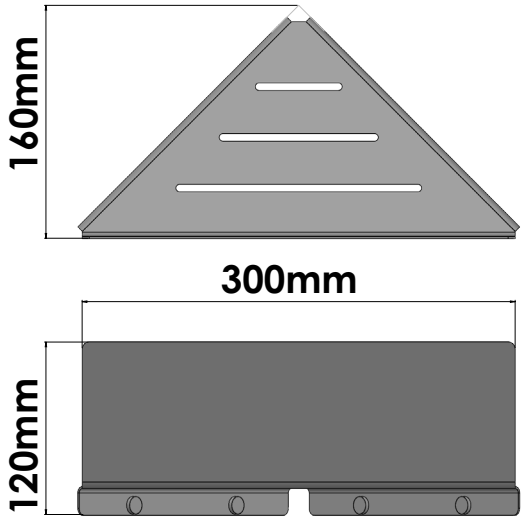

KATSIERIS BROS S.A.
Industry Bathroom accessories, Design & Manufacturing, Koropi Industrial Region, Loc: Poka 194 00, Koropi P.O. 27. Athens-Greece T:+30 210 6627 500, info@sanco.gr, www.sanco.gr