Line : **Lithos**

Type : **Portable Dispenser**

Code : **121122-A03**

Metal : **Brass**

Finishing : **Chrome**

## Product Photo



## Technical Sheet

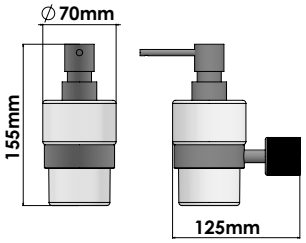


## Mounting Instructions

### Step 1

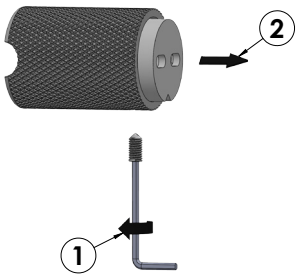


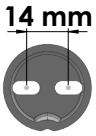


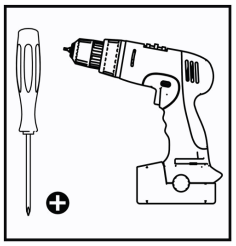

### Step 2

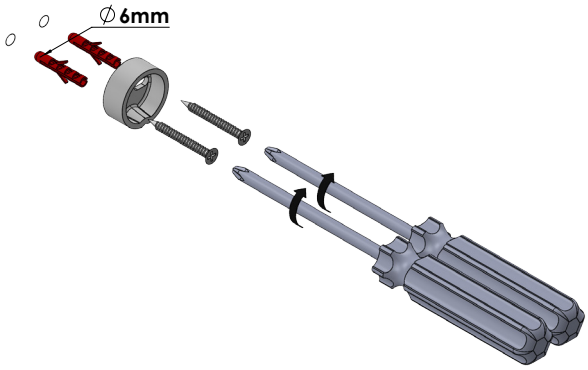


### Step 3

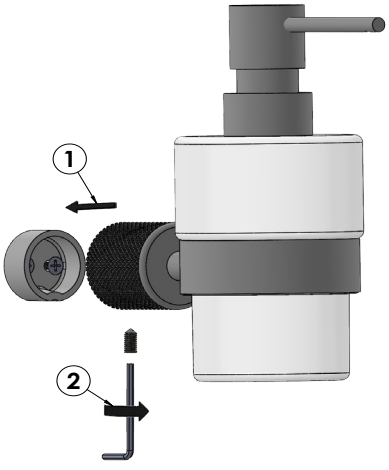


**KATSIERIS BROS S.A.**
Industry Bathroom accessories, Design & Manufacturing, Koropi Industrial Region, Loc: Poka 194 00, Koropi P.O. 27.
Athens-Greece T:+30 210 6627 500 info@sanco.gr, www.sanco.gr