Line : **Lithos**

Type : **Dispenser wall mounted**

Code : **121118-A03**

Metal : **Brass**

Finishing : **Chrome**

Product Photo



Technical Sheet

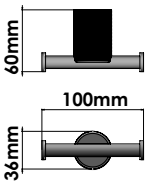

Mounting Instructions

Step 1

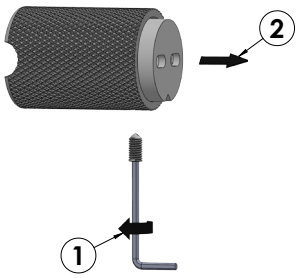

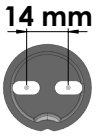

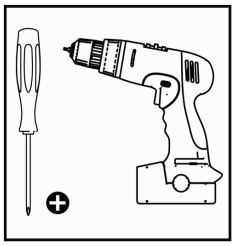

Step 2

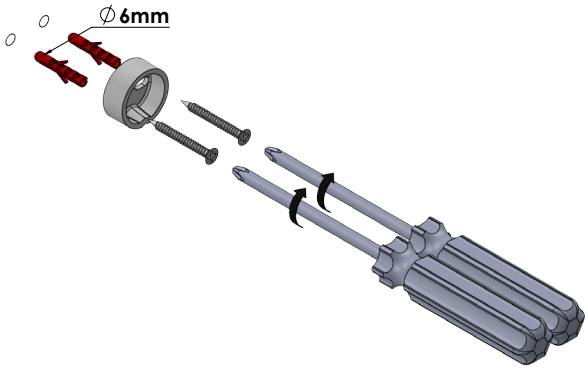

Step 3

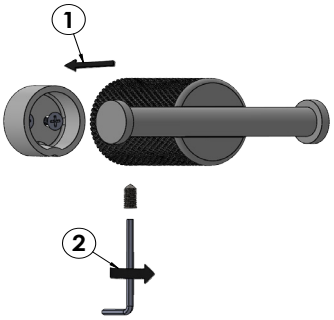

KATSIERIS BROS S.A.
Industry Bathroom accessories, Design & Manufacturing, Koropi Industrial Region, Loc: Poka 194 00, Koropi P.O. 27.
Athens-Greece T:+30 210 6627 500 info@sanco.gr, www.sanco.gr